Icon

INSTRUCTIONS

LAMPING

Risk of fire and electrical shock. Installation requires knowledge of electrical systems and should be installed by a qualified electrician. If not qualified, DO NOT ATTEMPT INSTALLATION.

To avoid the risk of fire or overheating, do not exceed the recommended wattage.

SHUT OFF ELECTRICAL SUPPLY AT THE CIRCUIT BREAKER

CARE INSTRUCTIONS

Wipe with a soft cloth only. Always avoid using harsh chemicals and/or cleaners.

INSTALLATION

fig. A

Remove the Diffuser and LED Strip from the fixture using the 2 thumb screws. Carefully disconnect the LED Strip from the fixture by pinching the quick connect exposing the mounting holes in the frame.

fig. B

Connect the wires from the fixtures driver to the junction box:

WIRE CONNECTION
Attach the junction box GROUND WIRE to the bare copper GROUND WIRE from the fixture. Fasten with a plastic wire nut. If there is not a ground wire from the junction box, wrap the bare copper ground wire from the fixture around the green screw on the mounting bracket.

Connect the fixture's WHITE [neutral] wire to the NEUTRAL WIRE from the junction box.

Connect the fixture's BLACK [hot] wire to the HOT WIRE from the junction box.

Tuck the wired connections into the junction box and position the fixture correctly over the junction box holes. Wires must be neatly positioned for the fixture to sit properly on the mounting plate.

Fasten the fixture to the junction box using the (2) provided screws.

fig. C

Re-connect the LED Strip to the fixture using the same quick connect. Secure the LED Strip to the fixture using the 2 thumb screws removed earlier.

A

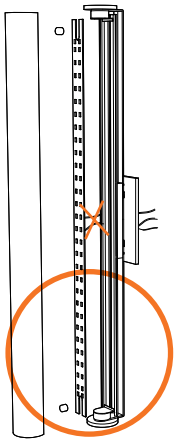

B

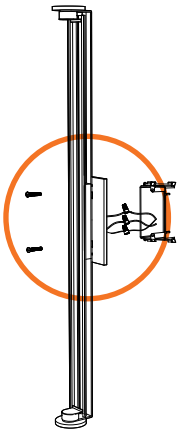

C

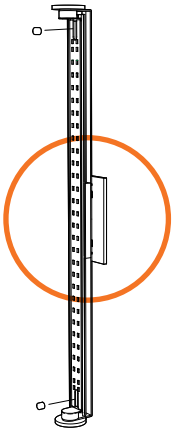

AYRE

AYRE Lighting Group, Inc.
14 Bristol Drive, Unit B
South Easton, MA 02375

Tel 508.205.0545
Toll Free 877.722.AYRE
info@ayrelight.com

ayrelight.com

fig. D

Once the LED Strip is secured, pinch the diffuser on each side and insert one edge into the appropriate channel on the fixture. Repeat the same for the other side of the diffuser until it completely snaps into place. Slide the diffuser up or down until it is positioned correctly on the fixture.

Restore power to the junction box.

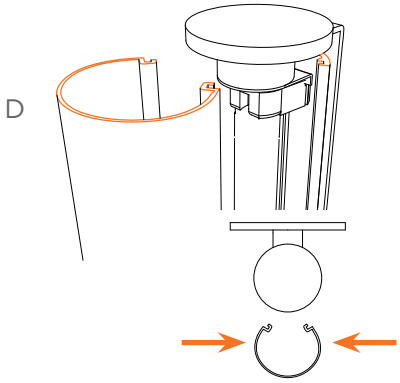

RECOMMENDED LED DIMMER SWITCHES

LED Dimming specifications are not as straight forward as incandescent dimming. You will need an LED dimmer switch to correctly control the LED modules in the fixture. **USE ONLY** Electronic Low Voltage dimmers (ELV) with Reverse Phase, Trailing Edge. This allows the fixtures intensity to dim from high-to-low and low-to-high while reducing flickering. *DO NOT use Triac dimmers - incandescent, C-L, forward phase and Magnetic Low Voltage (MLV) as these will not work with AYRE LED modules.*

If you are not qualified, do not attempt installation.
Always consult with a certified electrician.

AYRE recommends using the following dimmers with our linear LED fixtures as they provide the best range of dimming control.

Brand	Series	Model
Lutron	**Diva**	**DVELV-300P***
Leviton	Vizia+	VPE04-1LZ
	Vizia+	VPE06-1LZ

Additional options

Lutron	Maestro	MAELV-600
Leviton	Decora	DSE06-10Z

There are many dimmer options on the market. Choosing an Electronic Low Voltage Dimmer with Reverse Phase and Trailing Edge are required for the best dimming performance.
Always consult with a certified electrician
**Performed best under testing*

ELECTRICAL ROUGH-IN

A standard single rectangular junction box is required for installation.

For bathroom applications, Ayre recommends installing a light fixture on each side of the cabinet/mirror.

When marking the rough-in for the junction box(es), the center of each fixture should be at least 5” away from each edge of the cabinet/mirror, making the total distance between the light fixtures a minimum of 20-30” from center to center.

The height for the center of the junction boxes is dependant on the height of the mirror/cabinet while also taking into consideration the height of the end user. We recommend that the center of the diffuser should be at the center of the users face.

HORIZONTAL OR VERTICAL MOUNTING
JBOX MUST BE INSTALLED IN DIRECTION OF FIXTURE

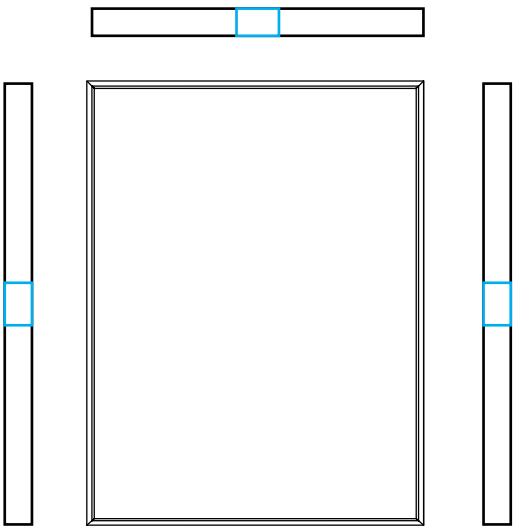

Ayre Architectural Lighting
14 Bristol Drive, Unit B
South Easton, MA 02375

Tel 508.205.0545
Toll Free 877.722.AYRE
Fax 508.205.0548

ayrelight.com